90 Minute Promatect® 250 Protection to Steel Joisted Mezzanine Floor

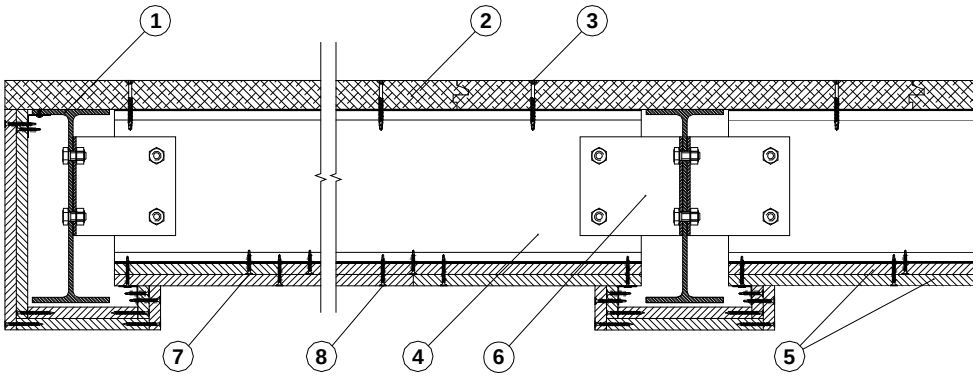

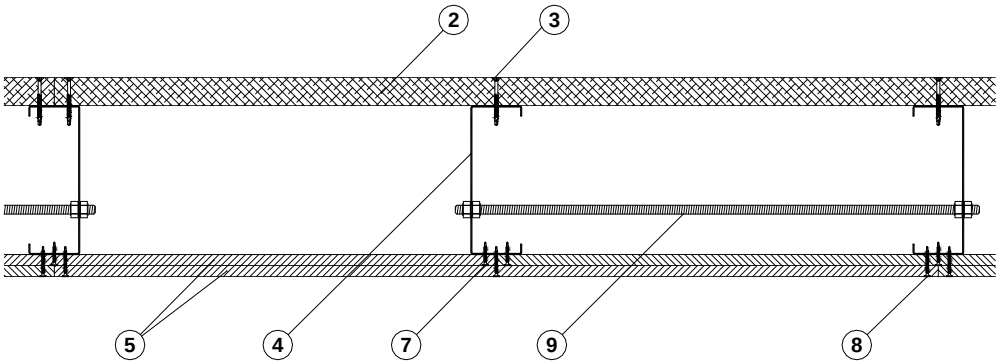

Supporting Steel Frame: The supporting steel framework of the mezzanine floor **(1)** (including the columns) should be fire protected for a period equal to, or greater than that required for the mezzanine floor itself. For further details on the requirements for protecting structural steelwork, refer to the Promat Fire Protection Handbook. This may normally be achieved using 20mm VERMICULUX® or 20mm PROMATECT® 250. However, for steel sections with an A/V (section factor) greater than $162m^{-1}$, consult Promat Technical Services Department.

Cold Rolled Joists: Galvanised steel channel joists designed in accordance with BS 5950-5 **(4)** at maximum 600mm centres. Joists down to 172mm deep may be used depending upon the spanning and loading requirements. The maximum floor loading should not exceed 80% of the maximum design load calculated from the joist manufacturers loading tables for the chosen joist size.

Joists may be inset cleated **(6)** to the supporting beams (as shown) to maximise headroom, or designed with top cleats where the joists oversail the beams, using cleats of minimum 3mm thickness and fastened with minimum two M12 bolts. Any requirements for cross bracing of the joists by the joist manufacturers using tie-rods **(9)** must be followed. (These may typically be M12).

Flooring: Typically 38mm thick x 600mm wide Flooring Grade P6 Chipboard **(1)** to BS EN 312:1997, T&G on two long edges **(2),** designed to BS 6399-1:1996 for loadings up to $5.0kN/m^2$ UDL; laid perpendicular to the joists and fixed using 60mm Timberdeck winged self-drilling screws **(3)** at 400mm centres (2 fixings per board at each joist position). Board joints to coincide with joists, and staggered between panels.

Ceiling: Two layers of 12mm thick x 2500mm x 1200mm PROMATECT® 250 boards **(5)**, are fastened to the underside of the steel joists. Boards are laid parallel to the joists with joints coincident with the joists, and are staggered by at least 600mm between layers. Transverse board joints are staggered by at least 300mm between layers and fastened using minimum 25mm (first layer) **(7)**, and 35mm (second layer) **(8)**, using self-drilling drywall screws at nominal 200mm centres in both layers. Cover strips to transverse joints are not required. The alternative rebated edge board joint system may be used on the exposed layer of board on floors with minimum 200mm deep joists.

NB: Consult mezzanine joist manufacturers for joist sizes and centres, appropriate to the loading requirements of the mezzanine floor.

AUTHORITY: **Bodycote: WF Assessment Report No 162600**

Promat UK Limited
Technical Services Department
The Sterling Centre, Eastern Road
Bracknell, Berkshire RG12 2TD
Tel: 01344 381 400
Fax: 01344 381 401
E-mail: technicaluk@promat.co.uk